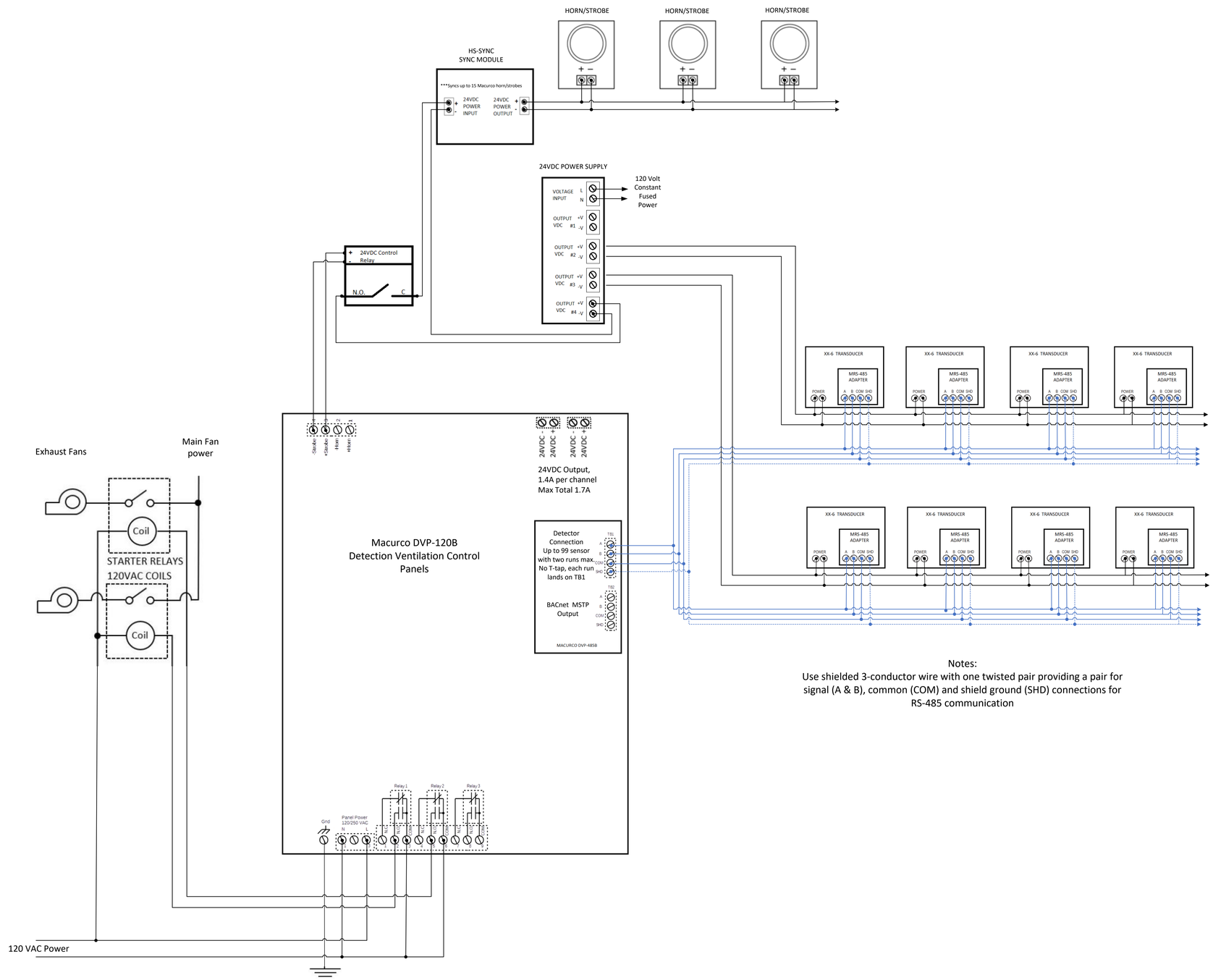

Notes:
Use shielded 3-conductor wire with one twisted pair providing a pair for signal (A & B), common (COM) and shield ground (SHD) connections for RS-485 communication

MACURCO GAS DETECTION

Macurco Inc.
1504 West 51st Street
Sioux Falls, SD 57105
1-877-367-7891

Macurco™ Building & Home Solutions

Title: DVP-120B
REV 1.0
2-27-2023

All drawings are for reference only. Electrical diagrams / drawings must be reviewed and approved by a local governing authority prior to installation. Macurco makes no representation or warranty concerning wiring diagrams / drawings, and you are to rely solely on the recommendations and requirements of the local governing authority.